Transmission and Distribution of Electrical Power

By

Associate Prof. / Mohamed Ahmed Ebrahim Mohamed

E-mail: mohamedahmed_en@yahoo.com

mohamed.mohamed@feng.bu.edu.eg

Web site: http://bu.edu.eg/staff/mohamedmohamed033

Lecture (5)

Associate Prof. Dr . Mohamed Ahmed Ebrahim

Contents

- Chapter 1:

  Transmission Line Constants
- Chapter 2:

  Transmission Line Models and Calculations
- Chapter 3:

  Mechanical Design of Overhead T.L
- Chapter 4:

  D.C. power Transmission Technology

Mechanical Design of Overhead T.L

Main considerations in the mechanical design of transmission lines

Over head transmission lines should be designed with the necessary mechanical strength to counter the stress due to weather conditions in the area in which the transmission Lines are located. The transmission line conductors are supported at towers. The conductors will be pulled and the stringing affected.

Continue

The lines should be designed in such a way that the tension does not exceed the permissible limit. This limit may be the breaking strength of the conductor divided by the safety factor which is taken about 2.0 to 2.5. The characteristics of the conductors, sag-tension relations, permissible clearance from the ground and effect of variation of temperature and consequent changes in the stress should be considered in stringing procedures.

Loading on Transmission Conductors

- Loading on transmission conductors is generally due to:

  (i) Weight of the conductor-vertical load.

  (ii) Weight of ice accumulated on the conductor in cold weather, if any ($1m^3$ of ice weighs 915 Kg), and

  (iii) Wind load acting on the surface of the conductor-horizontal.

Continue

- In most countries, weather charts are prepared showing the wind-pressure belts with expected values and ice loading where this type of load exists. Transmission lines loading are classified as heavy loading, medium loading and light loading for, purpose of mechanical design of lines.
- In the USA, heavy loading is taken to be 1.27 cm thick covering of ice and 39 Kg/m^2 wind pressure; medium loading to be 0.63 cm thick coating of ice on the line, and 39 Kg/ m^2 wind pressure and light loading as no ice coating on the lines and 39 Kg/ m^2
- Wind pressure. The wind pressure is assumed to act on the projected area of the conductor.

Continue

- In the UK, heavy loading is 0.952 cm ice covering and 39 Kg/ m^2 wind pressure; medium loading 0.476 cm ice covering and 39 Kg/ m^2 wind pressure and light loading no ice covering the lines, and 39 Kg/ m2 wind pressure.
- In India, there is no ice loading on the lines. Heavy loading is taken as 147 39 Kg/ m^2 wind pressure; medium loading 98 Kg/ m^2 and light loading 73 Kg/ m^2 wind pressure. In some coastal regions, wind pressure may be taken as 49 Kg/ m^2. It is assumed that the wind pressure acts on two-thirds of the projected area of the conductor.

Span, Sag and Tension

- The span or the distance between poles or towers is chosen according to the voltage and the size of the conductor used for the transmission line. When a conductor is supported between poles or towers, it will sag or dip due to its own weight. It is necessary to maintain a certain minimum clearance between the lowest point of the conductors have to be pulled using the necessary tension, consistent with the strength of the conductors. There would, therefore, be a definite relation (that can be derived) between the span, sag and tension of the line.

Continue

Voltage in kv	Span in meter
11	100
33	100
66	200
110	250 to 300
132	300
230	300

Table(3.1) span corresponding to transmission voltage

Continue

- If the span is increased, sag will be more and keep the minimum clearance above the ground, the height of the towers supporting the conductors at both ends should be increased. This makes the line more expansive. The choice of span depends on the size of the conductors necessary and the mechanical loading expected on the conductors due to local conditions. It is thus an economic choice.

Continue

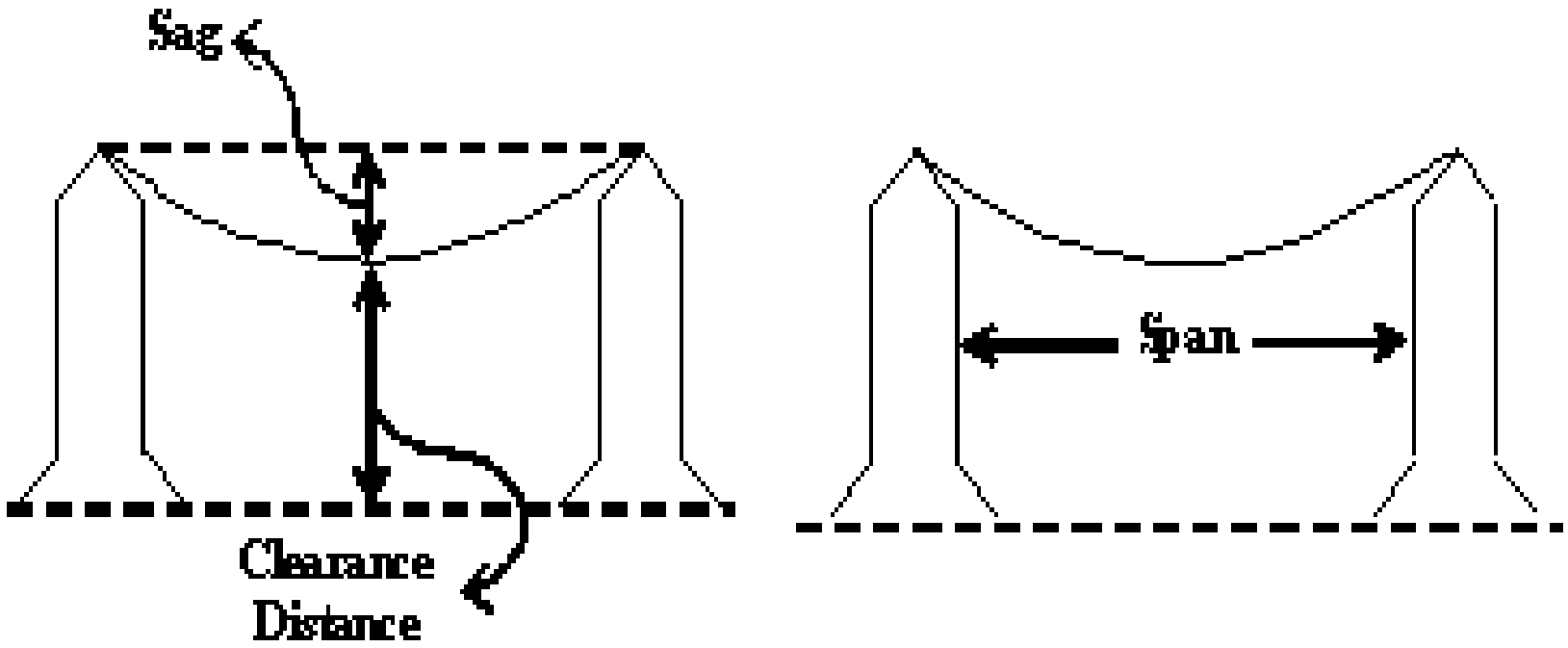

Fig.(3.1) shows the span and the sag in the transmission line

Clearance from ground

- When transmission lines are constructed, it is necessary to maintain a clearance from the lowest point of the conductors to the ground for safeguarding life and property. The distance to be thus kept depends on the voltage level of the transmission line. As an approximation, it may be taken as 6+0.01 m per kV. Actually, there are rules stating a certain minimum clearance under certain conditions for different locations. The minimum distance is 6 m at low voltage level and it increases at high voltage levels. Also, it depends on the situation of the line, i.e. whether it is crossing a main road or is passing over buildings, in which cases necessary additional precautions are to be taken.

Continue

Voltage	Min Clearance from Ground (m)
Low voltage	5.8
Less than 66 kV	6.0
Between 66 kV and 110 kV	6.4
Between 110 kV and 166 kV	6.7
Above 166 kV	7.0

the minimum clearance normally used

Sag-Tension Relation

The sag or dip of the conductors depends on the span,

loading conditions on the conductors, and the tension to be allowed consistent with the breaking strength and the safety factor. Knowing the permissible tension, span and the loadings, as well as the position of the supports or towers and the difference in their levels, if any, the sag in the particular span

of the transmission line can be calculated. Fig (3.1) shows a conductor pulled between supports, A and B with a certain tension and O is the lowest point of the conductor. This is at distance x1,from support B and (2ℓ - x1) from support A where, 2ℓ is the length of the span. The two supports A and B are at different levels, the difference in levels being h. Take any point P on the conductor.

Nomenclature

- H : horizontal component of Tension,
- T : Tension at point P ,
- T_X : Horizontal component of Tension at P
- T_Y : Vertical component of Tension at P
- Φ : angle the tangent makes at point P with the horizontal,
- OP = s : Length of the conductor from the lowest point O to the point P,
- D_s : Small length of the conductor,
- D_x : Horizontal component of ds,
- D_y : vertical component of ds

Continue

- d : sag at the lowest point with reference to support B,
- d+h:Sag at the lowest point with reference to support A,
- W : Weight of the conductor per unit length,
- WS : Weight of the conductor of length OP. This acts downwards and at the center of the length OP.

Continue

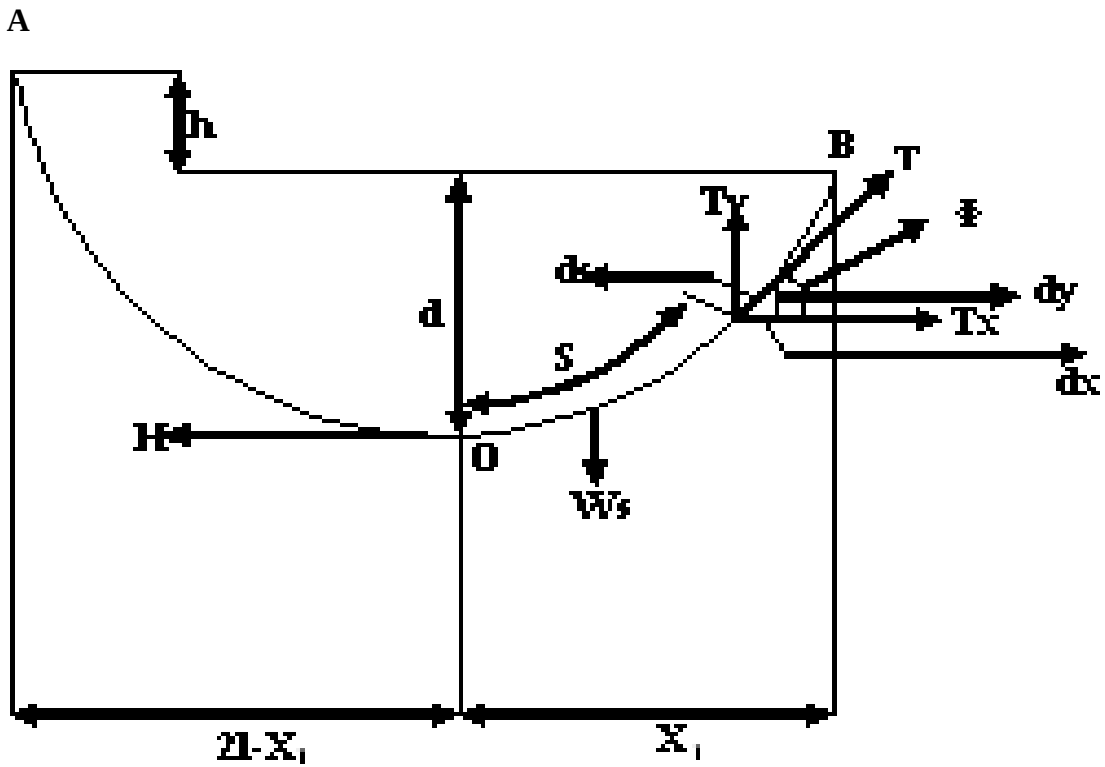

Fig.(3.2) a typical span of transmission line when two towers in different levels

Continue

- For balance, the vertical component T_y at point P should balance the downward acting weight ws and the horizontal component of tension T_x at P must balance the horizontal tension H acting at the lowest point

Thus,

$$T_y = ws \quad \& \quad H = T_x$$

$$\tan\phi = \frac{dy}{dx} = \frac{T_y}{T_x} = \frac{ws}{H}$$

Continue

$$ds = \sqrt{(dx)^2 + (dy)^2}$$

$$\frac{ds}{dx} = \sqrt{1 + \left(\frac{dy}{dx}\right)^2} = \sqrt{1 + \frac{w^2 s^2}{H^2}}$$

$$\int dx = \int \frac{ds}{\sqrt{1 + \left(\frac{w^2 s^2}{H^2}\right)}}$$

Continue

Which gives

$$X + C_1 = \frac{H}{w}\sinh^{-1}\left(\frac{ws}{H}\right)$$

At the point, $x = 0$, $s = 0$

So $C_1 = 0$ and the equation can be expressed as,

$$s = \left(\frac{H}{w}\right)\sinh\left(\frac{wx}{H}\right) \qquad (3.1)$$

$$\frac{dy}{dx} = \frac{ws}{H} = \sinh\left(\frac{wx}{H}\right)$$

Continue

- By integrating the above Differential Equation

$$y = \int \sinh\left(\frac{wx}{H}\right) dx$$

$$y = \frac{H}{w}\cosh\left(\frac{wx}{H}\right) + C_2$$

Continue

At O, y=0, when x=0, therefore

$$O = \left(\frac{H}{w}\right)\cosh(O) + C_2 = \left(\frac{H}{w}\right) + C_2$$

Or

$$C_2 = -\left(\frac{H}{w}\right)$$

And

$$y = \frac{H}{w}\left[\cosh\left(\frac{wx}{H}\right) - 1\right]$$

Continue

The tension T at point P is given by

$$T^2 = T_x^2 + T_y^2 = H^2 + w^2 s^2$$

$$T^2 = H^2 + H^2 \sinh^2\left(\frac{wx}{H}\right) \qquad (3.3)$$

$$T^2 = H^2 \cosh^2\left(\frac{wx}{H}\right)$$

$$T = H \cosh\left(\frac{wx}{H}\right)$$

Continue

- Equations (3.1), (3.2) and (3.3) give the relations between the length, Tension and horizontal and vertical position of the point P with respect to the lowest point O. if the supports are the same levels, and the span is 2ℓ or half span is ℓ, the above expressions reduce to

$$s = \left(\frac{H}{w}\right)\sinh\left(\frac{wl}{H}\right) \tag{3.4}$$

$$d = \left(\frac{H}{w}\right)\left[\cosh\left(\frac{wl}{H}\right) - 1\right] \tag{3.5}$$

Continue

$$T = H\cosh\left(\frac{wl}{H}\right)$$

If the supports are at unequal levels and the lowest point is at a distance x_1 from the support B,the distance y_1 or d would be given by Eq.(3.2), by substituting the value x as x_1

Thus,

$$y_1 = \left(\frac{H}{w}\right)\left[\cosh\left(\frac{wx_1}{H}\right) - 1\right] \qquad (3.7)$$

And the vertical distance referred to support A is given by, d+h or y_2 .

Continue

$$y_2 = y_1 + h = \left(\frac{H}{w}\right)\left[\cosh\left(\frac{w(2l - x_1)}{H}\right) - 1\right] \qquad (3.8)$$

From equations (3.7) and (3.8)

$$h = \left(\frac{H}{w}\right)\left[\cosh\left(\frac{w(2l - x_1)}{H}\right) - \cosh\left(\frac{wx_1}{H}\right)\right] \qquad (3.9)$$

$$= \left(\frac{2H}{w}\right)\sinh\left(\frac{wl}{H}\right)\sinh\left(\frac{w(l - x_1)}{H}\right)$$

Continue

- Equation (3.9) gives the difference in level between the supports. If the value of h is known but x_1 is not, then from equation (3.9)

$$x_1 = l - \left(\frac{H}{w}\right)\sinh^{-1}\left[\frac{hw}{2H\sinh\left(\frac{wl}{H}\right)}\right] \qquad (3.10)$$

Knowing ℓ,H, and w, and the difference in level h. find x_1 , i.e. the distance from the lower support where the conductor point will be lowest, then find y_1+h (or y_2). Thus the sag with reference to support A or B can be found.

Continue

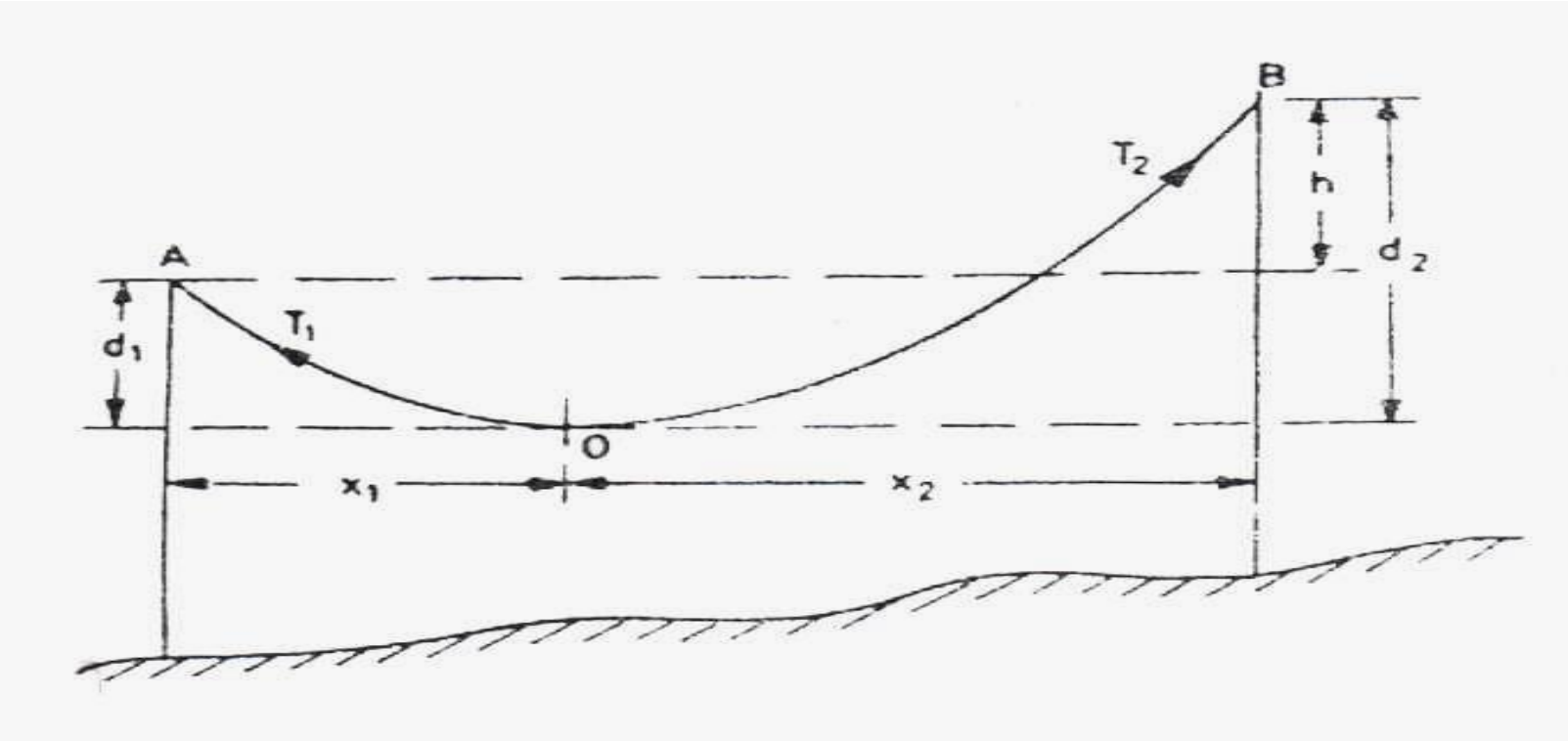

Fig.(3.3) Span in hilly country

Continue

- When the effect of ice loading is to be included, the weight of ice on the conductor per meter length should be added. If the wind pressure is also to be accounted for, the wind pressure acting on the projected area of the conductor per meter converted to load should be added to the weight and resultant weight.

$$W = \sqrt{w^2 + w_p^2}$$

Continue

Where,

W_c : weight of conductor $= \pi * \left(\frac{d^2}{4} \right) * \rho$ kg/m

W_i = weight of ice $= \rho_i * v_i = \rho_i * \left(\frac{\pi}{4} \right) * \left[(d + 2x)^2 - d^2 \right]$

$$W_i = \rho_i * \pi * x * (d + x)$$ Kg/m

Continue

W_w : wind loading * (d + 2x) Kg/m

x : thickness of ice (m)

d : diameter of conductor (m)

ρ_c : density of conductor (Kg/m^3) = 3000 Kg/m^3

ρ_i : density of ice (Kg/m^3) = 915 Kg/m^3

w_c : acting downwards – vertical loading

w_w : acting tangent to the line – horizontal loading

Continue

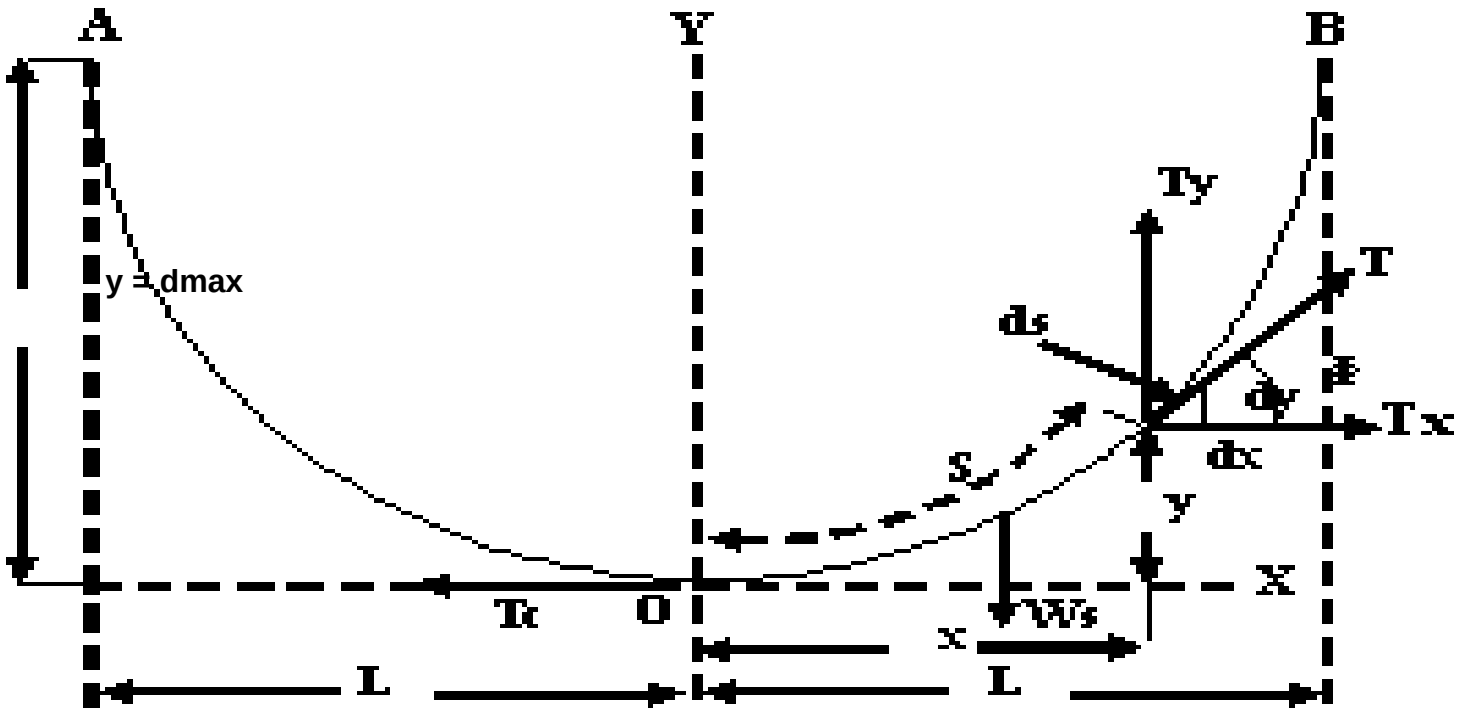

Fig (3.5) The case when two towers in the same level

Stringing of Transmission Lines

The process of pulling conductors between supports of the towers is known as stringing of the lines. Stretching conductors as tightly as possible within safety limits helps in reducing the height of the towers. In stringing the lines, the necessary clearance should be kept between the lowest point of the conductors and the ground.
The sag - tension relation is worked out as shown in sec. 3.2 for a given span. Stringing is done either by measuring the tension correctly while pullingat the supports or by measuring the sag accurately.

Continue

While stringing, the weather conditions may (particularly temperature) and soit is necessary to know the temperature - tension and sag temperature curves for the conductor. The maximum sag may occur at either the maximum temperature to which the line will be subjected or the maximum loading conditions.
This has to be worked out before hand and the unstretched length of the line conductors found at the temperature at the time of erection. Otherwise the tension may exceed that permitted under worse conditions.

Continue

Strain - towers can stand even if all the wires on one side are broken. Flexible or semi - flexible towers are used between strain - towers in the interest of economy. The length of conductors will vary with the elasticity of material and the change of temperature. This variation has to be accounted for.

Effect of temperature

The length of the conductor will change due to changes in temperatures. The effect of this should be considered while stringing the line at the time of erection. If α is the linear coefficient of thermal expansion and if the temperature changes from t_1 to t_2, the length ℓ_2 at temperature t_2 is given by

$$l_2 = l_1[1 + \alpha(t_2 - t_1)] \qquad (3.11)$$

Continue

- The value of α should be that at t_1 . If it is at other temperature, this should be converted to correspond to the value at t_1 and then used in Eq. (3.11) for accuracy. If the temperature is increased, the length of the conductor increase, sag is increased and the corresponding tension reduced.

Unstretched Length of The Conductor

- When the towers and lines are constructed, the lines are under tension and the length of the conductor, in a span is the stretched length under that tension. At the time of , there is no stress on the conductor before pulling and the unstretched length will be smaller than stretched length. This unstretched length has to be worked out considering the type of the material and its modulus of elasticity (E).

Continue

- E :modulus of elasticity in Kg/cm^2
- A :area of the conductor in cm^2
- L :length of stretched conductor in m
- D :sag in m
- l :half span in m
- W :loading per unit length in Kg/m

Continue

The unstretched length L_u is given by,

$$L_u = L - \left[\left(\frac{wl^2}{AEd} \right) \left(1 + \frac{5d^2}{3l^2} + \frac{4d^4}{9l^4} + ... \right) \right] \qquad (3.12)$$

The length of the conductor in the span is given by L

$$L = 2l\{1 + \frac{1}{6}(\frac{wl}{T})^2 + \frac{7}{40}(\frac{wl}{T})^4\} \qquad (3.13)$$

Temperature-Sag and Temperature-Tension Charts

- For normal or average span used for transmission line work for a particular voltage range, temperature-sag and temperature-tension relations are worked out for the worst loading conditions to which the line will be subjected, and the charts prepared, so that they will be useful to the construction engineer at the time of erection of the line under given

Continue

- conditions of temperature.
- Sag will be increased with the increase in temperature, and tension will be decreased with the increase of temperature.

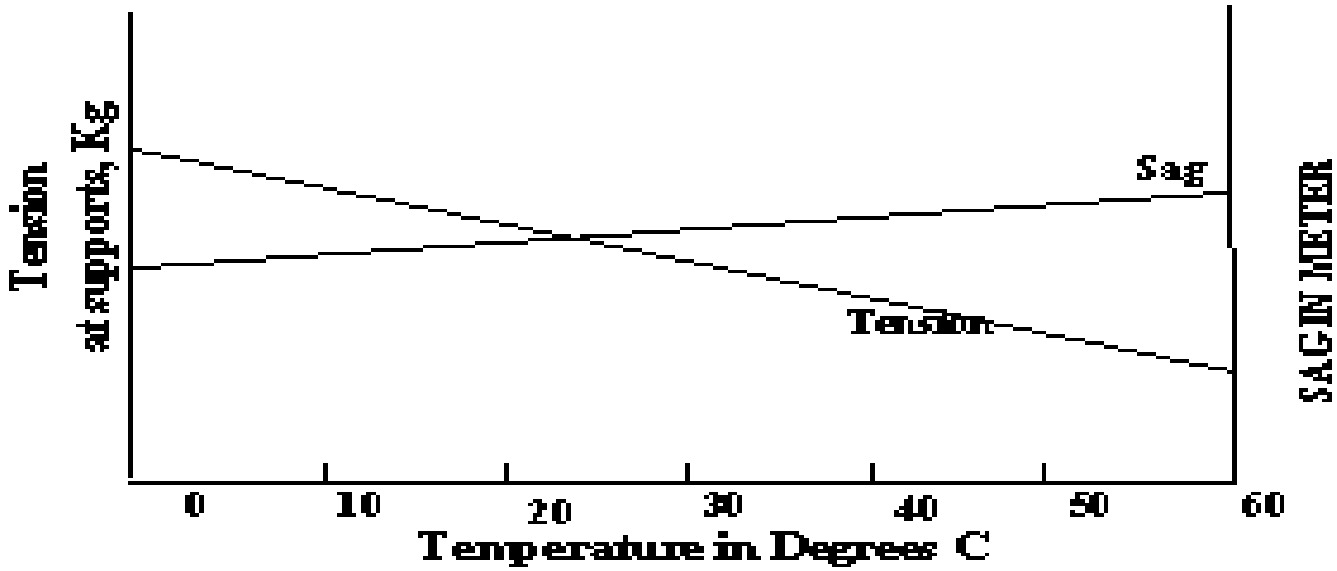

Fig. (3.6) Stringing chart

Locating Towers

- For normal or average spans used for particular lines and the normal size of the tower to be used, the sag and the nature of curve that the conductor will occupy under expected load conditions is calculated and plotted as a template. The minimum clearance required from the ground surface can be plotted as a similar curve parallel to the conductor shape curve on the template. If the height of the tower is standard and same, the curve for the tower footing line can also be shown on the template. This

Continue

- type of template is shown in Fig.(3.7). Knowing the nature of the ground where the line, is to be crested, and using the template, it is very easy to locate the position of towers maintaining the minimum clearance required from the ground at any point in the span length.

Continue

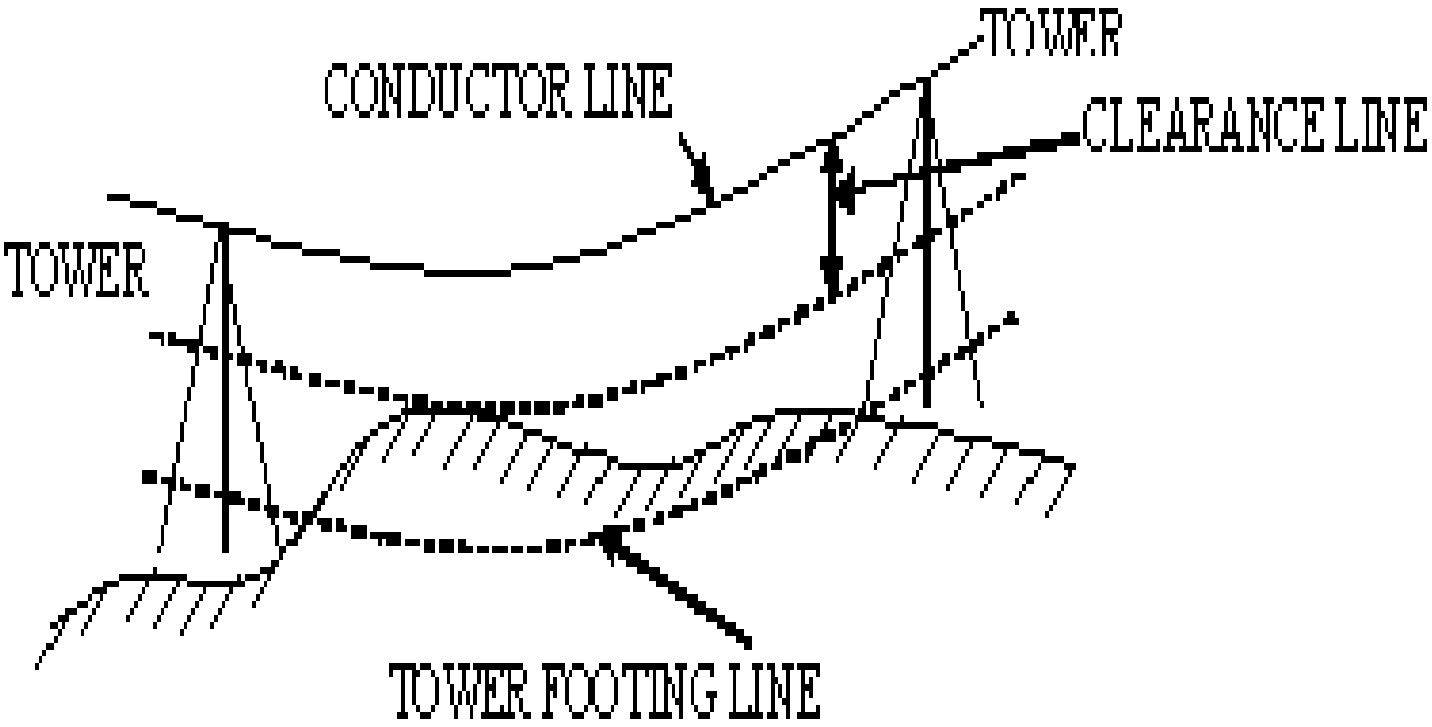

Fig.(3.7) Locating towers by use of template

Earth Wires

- In steel-towered transmission lines, to protect the lines against lightning strokes, shielding earth wires are commonly used. Most of the traveling waves due to lightning are caused by electrostatic induction. These can be reduced by the use of earth wires running above the transmission line and earthed at every tower. As shown in fig.(3.8)

Towers

- The towers for transmission lines are made of either wood if available in suitable size of length or more often steel to support the line conductors with suspension insulators. For low voltage concrete poles are used. The lines could be single-circuit lines or double-circuit lines and correspondingly, the constructions of towers would change. The spacing of conductors can be either vertical or horizontal. In low voltage cases, it can be in the form of a delta.

Continue

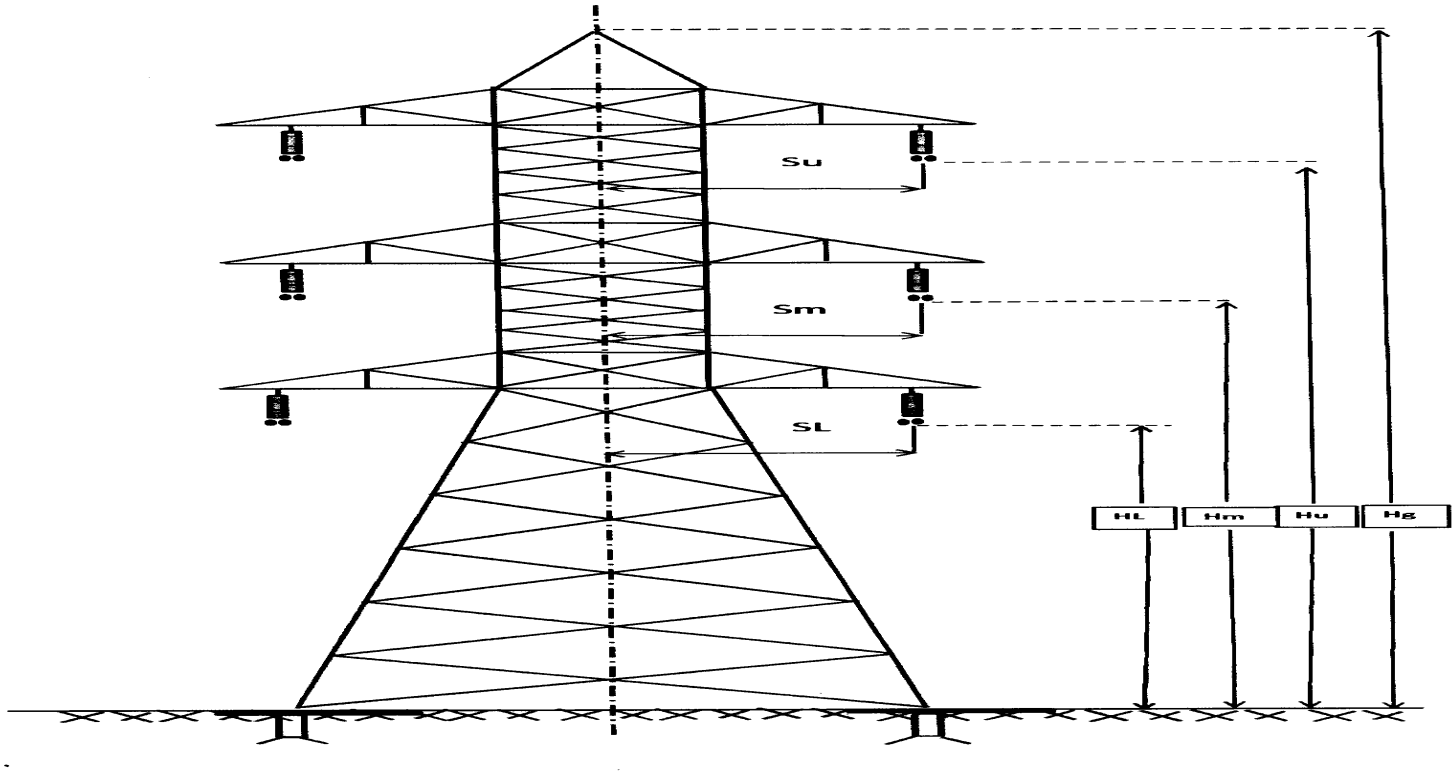

Fig. (3.8) Typical tower for 220 kV lines

With Our Best Wishes

Transmission and Distribution of Electrical Power

Course Staff

Associate Prof. Dr . Mohamed Ahmed Ebrahim